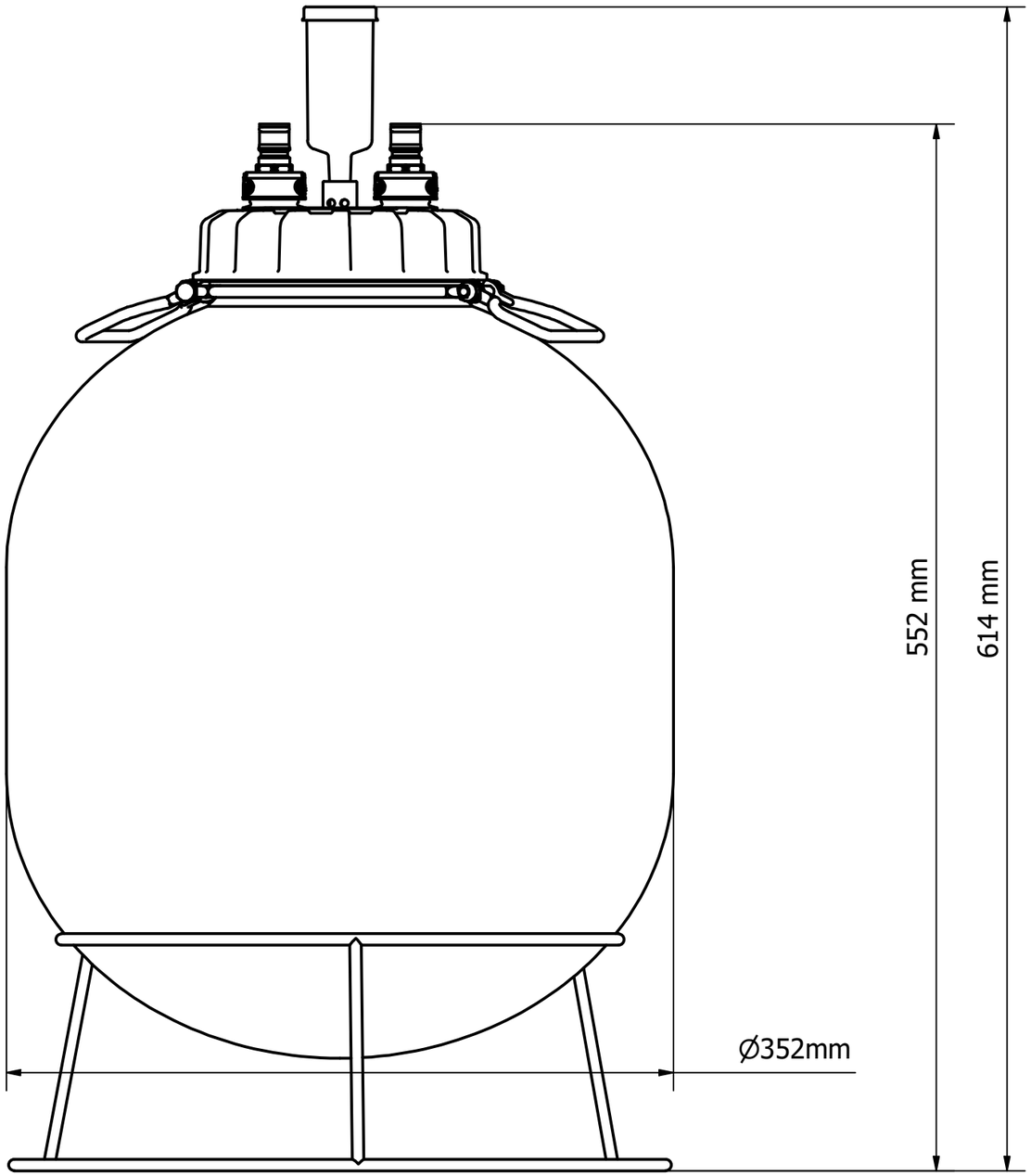
552 mm
614 mm
Ø352mm

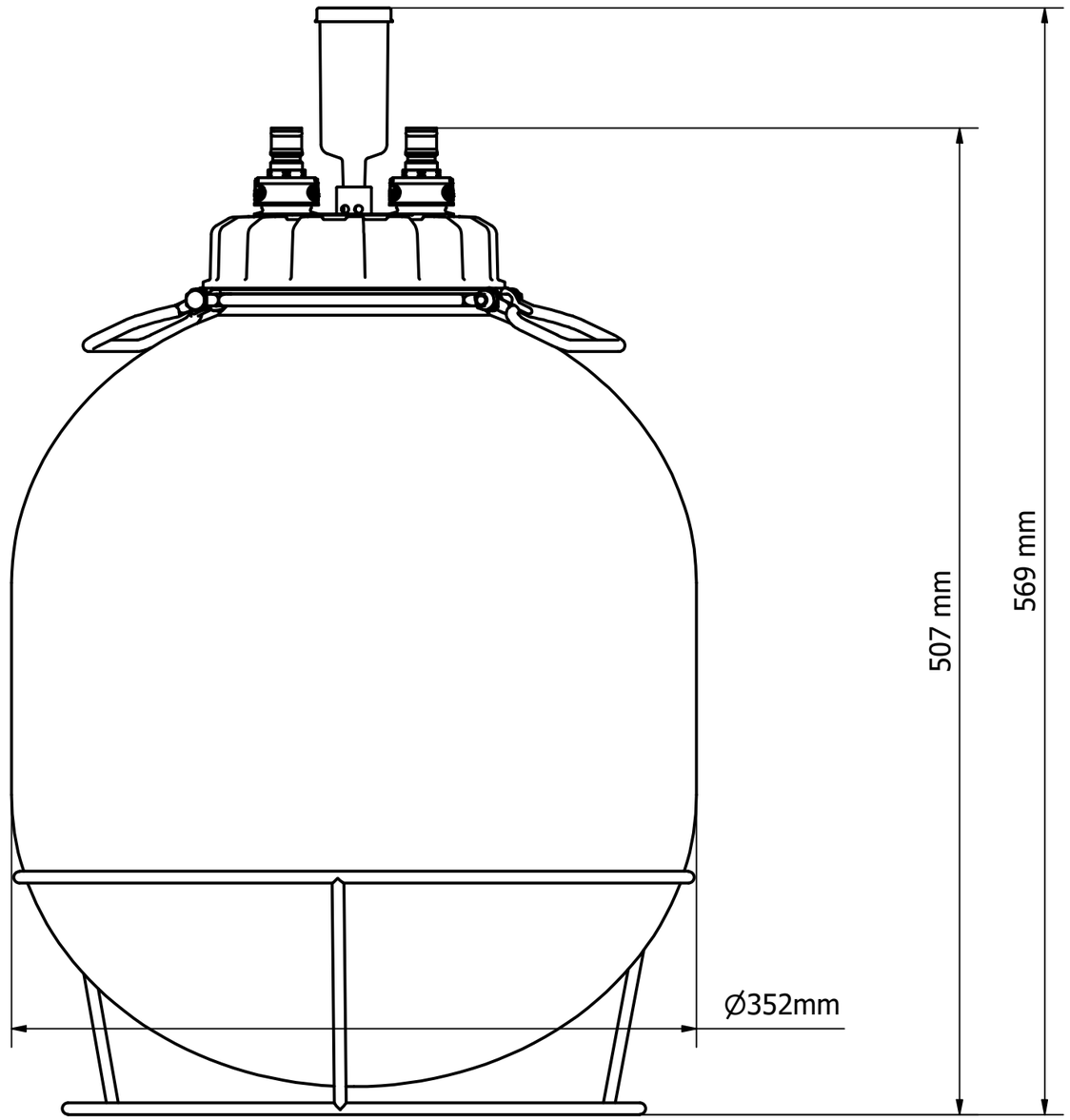
507 mm
569 mm
Ø352mm